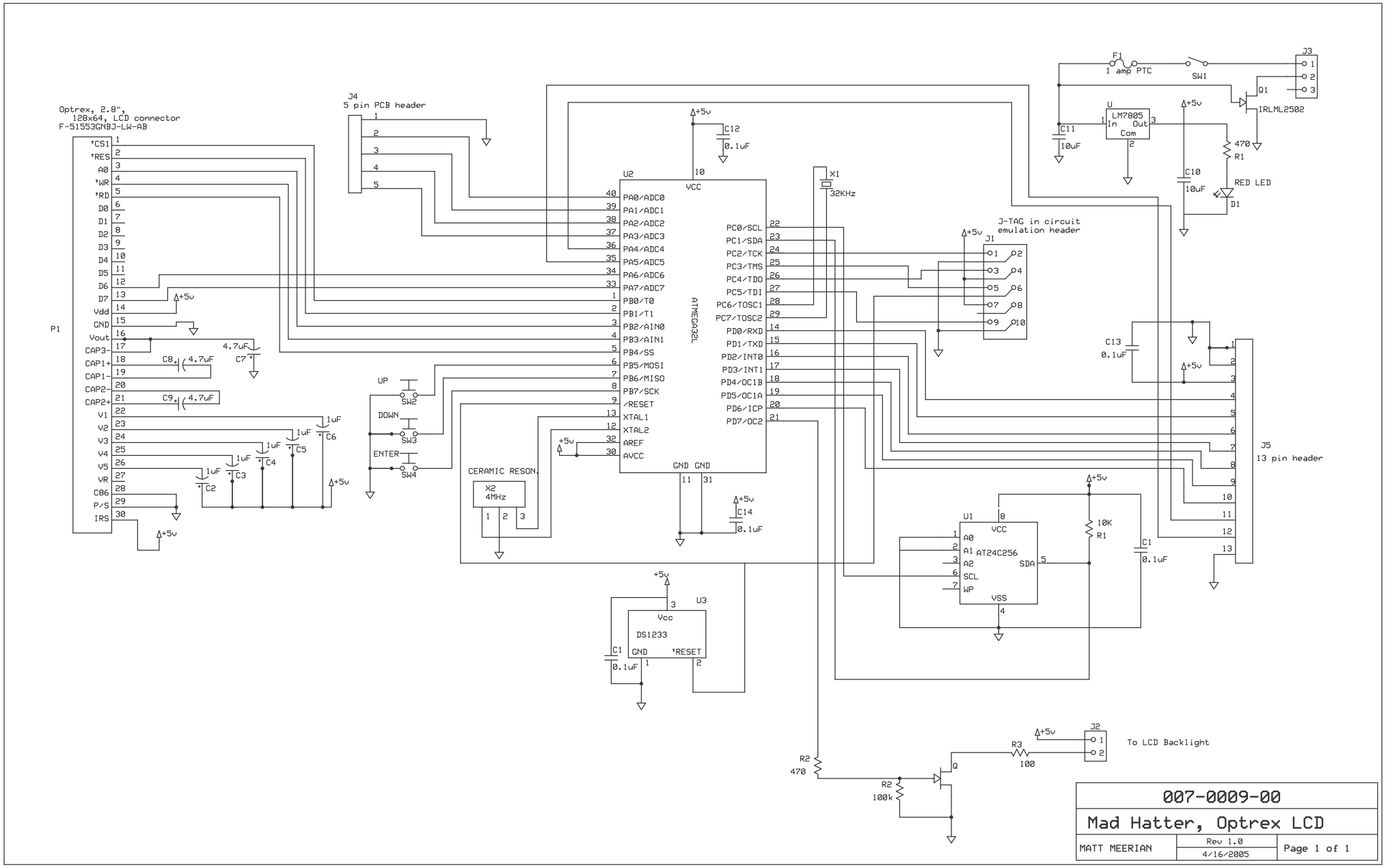

007-0009-00		
Mad Hatter, Optrex LCD		
MATT MEERIAN	Rev 1.0 4/16/2005	Page 1 of 1